ISSUE	REVISIONS	DRAWN	APPROVED	DATE
1	CHANGE CODE, ADD RoHS NOTE AND TRANSLATION	A.Hattanda	T.Okamoto	Nov.18.'05

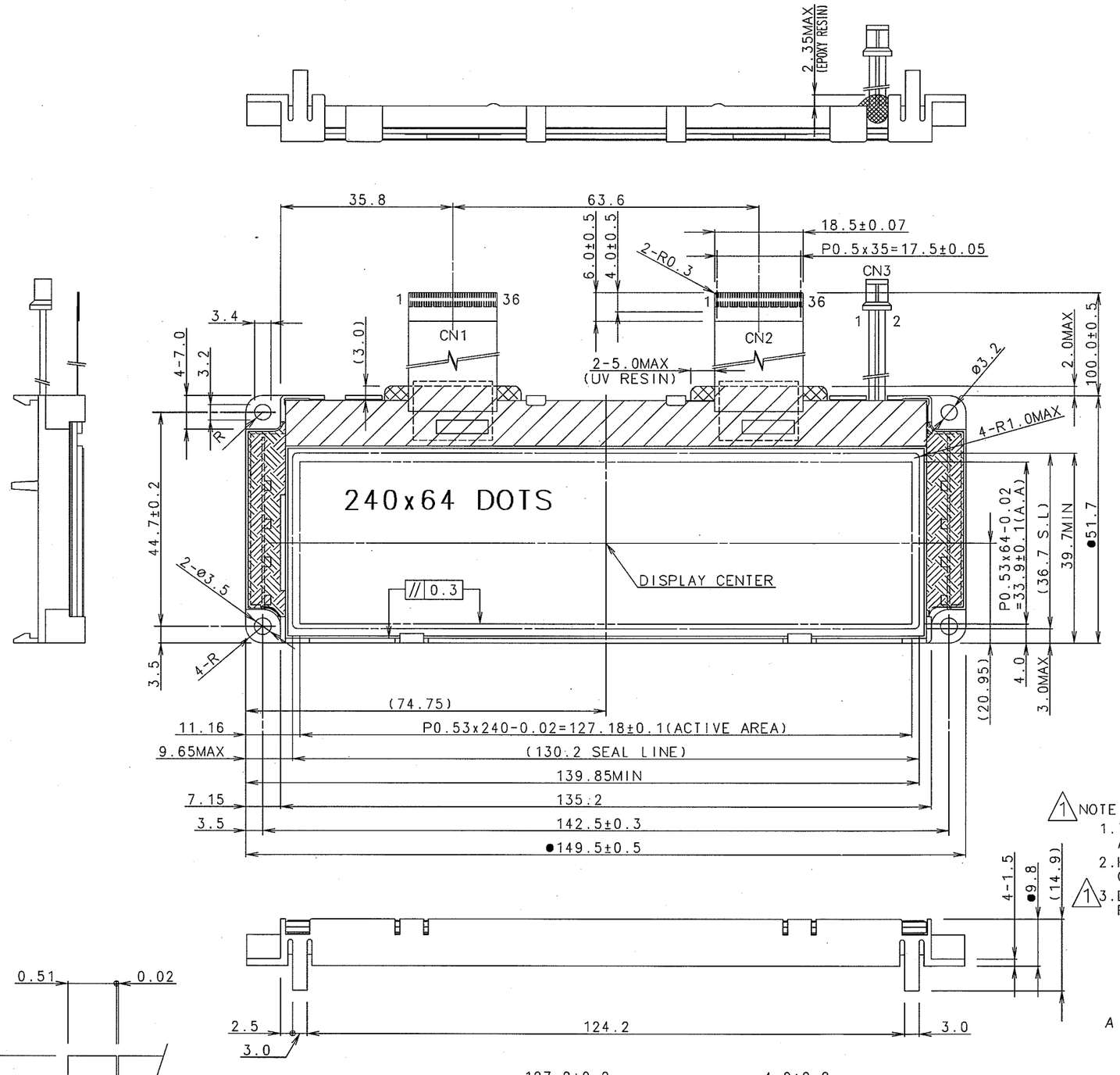

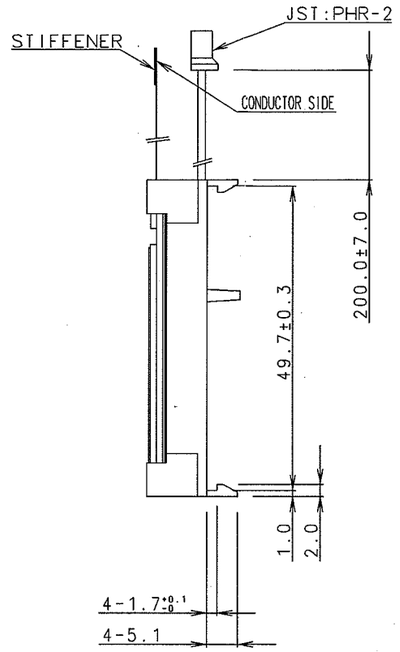

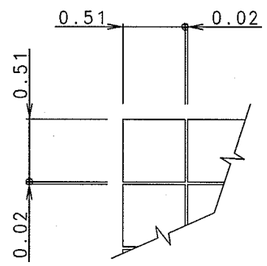

DOTS DETAIL
(S=20:1)

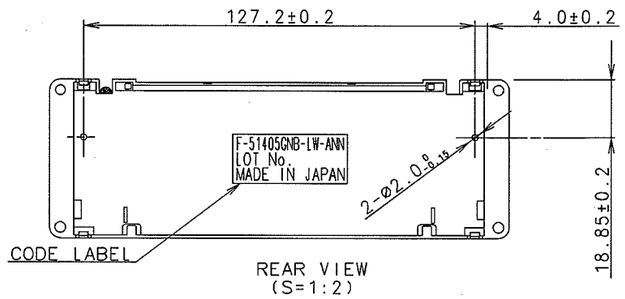

REAR VIEW
(S=1:2)

NOTE

1. THE DIMENSIONS WITH MARK● ARE CONTROLED AS A PARTICULAR CHARACTERISTIC.
2. HATCHING MARK SHOWS THE MAXIMUM AREA OF SILICON RESIN COATING.
3. DO NOT USE THE MATERIALS WHICH ARE PROHIBITED BY RoHS.

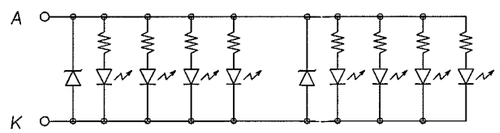

4X2=8 CHIPS(WHITE:5V)

PIN ASSIGNMENT

CN1-MASTER(IC1)
CN2-SLAVE (IC2)

No.	Symbol	No.	Symbol
1	NC	21	VOUT
2	FR	22	CAP3-
3	CL	23	CAP1+
4	$\overline{DOF}$	24	CAP1-
5	$\overline{CS1}$	25	CAP2-
6	CS2	26	CAP2+
7	$\overline{RES}$	27	V1
8	A0	28	V2
9	$\overline{WR}$	29	V3
10	$\overline{RD}$	30	V4
11	D0	31	V5
12	D1	32	VR
13	D2	33	C86
14	D3	34	P/S
15	D4	35	IRS
16	D5	36	NC
17	D6		
18	D7		
19	VDD		
20	VSS		

CN3

No.	Symbol
1	ANODE
2	CATHODE

TOLERANCE				THIRD ANGLE PROJECTION	DATE Jul.15'03	OPTREX CORPORATION
MEASURE	A	B	C			
L≤16	±0.1	±0.3	±1	UNIT mm	APPROVED T.Okamoto	TITLE DIMENSIONAL OUTLINE
16<L≤63	±0.2	±0.5	±1.5			
63<L≤250	±0.3	±0.8	±2	SCALE 1:1	CHECKED Y.Takada	CODE F-51405 AN base
250<L≤500	±0.5	±1.2	±3			
500<L	±0.8	±2	±4		DRAWN M.Nakada	DWG NO UE-311744A
ANGLE	±1°	±5°	±10°			

Issued on 2005/12/28